MOMENTUM LABS / PROJECTS

Lab 1: **Conservation of Momentum in a One Dimensional Collision.** You will be using one of the vernier tracks and a computer/LabQuest, and two photogates. The carts, on the track will collide and the computer will monitor the velocities of the two gliders. Using this data, it should be easy to determine if momentum is conserved in the collision. YOU WILL NEED TO CREATE BOTH A COMPLETELY INELASTIC COLLISION AS WELL AS AN ELASTIC COLLISION.
-In both cases, is momentum conserved within error? See resources for error rules.
-In both cases, is kinetic energy conserved? You know the answer, but you must prove it!
-Error Analysis will be necessary to show that your conclusions are valid.

I encourage creativity in the setup – use different masses with your carts/gliders, for instance. Collection time should be about five seconds with a high sample rate. You will want to be particularly careful about measuring the speeds of the carts JUST BEFORE AND AFTER the collision – this reduces the role of friction.

Lab 2: **Impulse and Momentum**. In this lab, you will cause a collision between a cart and a force probe. The force probe will monitor the variations in force as a function of time so that you can calculate the impulse. Simultaneously, you will calculate the momentum before and after the collision, hence the change in momentum. You will compare these two values (impulse and change in momentum) to verify the momentum-impulse relationship. Don't destroy the force probe in the collision! For accurate data, you MUST calibrate the force probe. DO NOT allow the force probe to move or oscillate during the collision.

First try this experiment with the spring plunger that is on the cart colliding with the force probe and calculate the change in mo and the impulse. Next, design or test some other object (cardboard box, balsa wood frame, rubber object, soft book, etc) by having the car make a collision sandwich (moving car, object, <u>securely</u> mounted force probe). Use a quality force probe set to 50N and a motion sensor/photogates. Read more about <u>impulse… it is the AREA of the force vs. time graph</u>. Save the force vs. time graph for use in your lab report. You should use only the velocity <u>just</u> before and just after the collision (perhaps only two-three data points on each side of the actual collision). Using only these velocities will reduce to a minimum the effects of friction. Be mindful of sign!

Your goal: Show that the Impulse-Momentum Theorem holds using actual measurements of both the impulse and the change in momentum for a collision.

Lab 3: A Collision in Two Dimensions. This classic lab allows you to study the collision between two balls and compare the momentum and kinetic energy before and after that collision.

The idea is to cause a ball of known momentum and kinetic energy to collide with a ball at rest. <u>Your task is to determine whether momentum and kinetic energy are conserved in this collision.</u> Since momentum (but NOT kinetic energy) is a vector, you must add, AS VECTORS, the

two momenta of the two balls after the collision. This vector sum should be equal to the no-collision momentum.

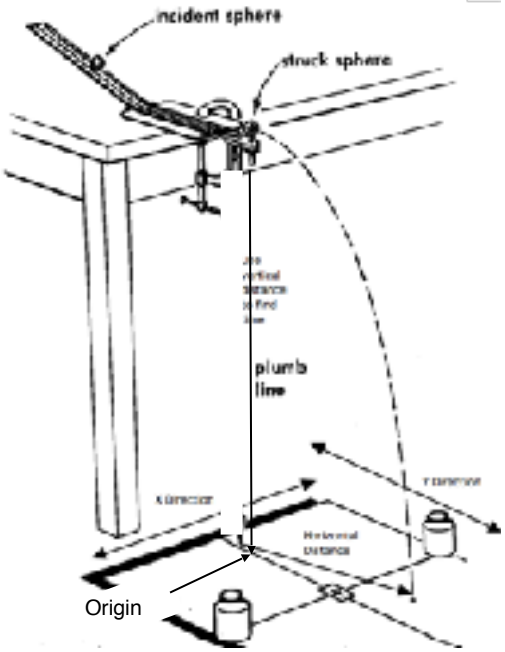

Construct the ramp exactly as shown and be sure to place the ball holder at the bottom end of the ramp as shown to the left.

You will collect all your data for Lab 3 on a piece of "butcher" paper, as shown in the graphic below. After the paper is secure, spread carbon paper on top of the butcher paper. When a marble lands on the carbon paper the location will be accurately marked on the butcher paper. Once all your trials are completed, you can locate the x-y coordinates of each marble landing. The butcher paper is your permanent record of the collisions and you will take the paper with you to use for your computations. This butcher paper also must be submitted with your work.

<u>Locate the origin</u> by hanging a plumb bob hanging below the launch bolt. Find the momentum of the metal ball with no collision, and use this landing location and the origin to define the y-axis. Compare the momentum of the single metal ball without collision with the total momentum of both balls after the collision (that is, with the vector sum of the two momenta). The collision MUST NOT be head-on! This is very important! Be sure to add the two momenta vector-wise. The momentum of each ball should be measured from the points as described in the graphic below.

<u>Repeat the collision with the plastic and metal ball</u>. I suggest that you always use the metal ball on the ramp. Why?

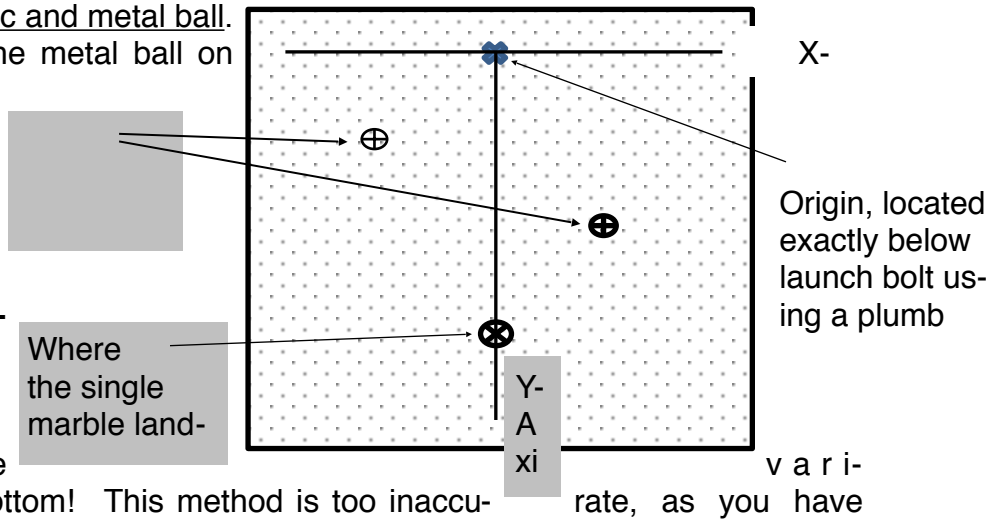

To complete the lab, **you must prove (using data) whether momentum and kinetic energy are conserved in the metal/metal and metal/plastic ball collisions.**

DO NOT use PE➔KE to find the various balls' velocity at the ramp bottom! This method is too inaccurate, as you have not learned about rolling KE. Instead, use the table height to find the time of flight to the floor, then use the time of flight and horizontal distance traveled to obtain Vh. Use the time of flight and horizontal distance traveled before landing to compute the Vh for all marbles. Note: Vh will still need to be broken into Vx and Vy so that you can find the momentum of each marble in the x and y directions.

FOR ALL PROJECTS / LABS:

Please prepare a brief lab report that includes the following:

1. Background/Intro that includes: Theory of Conservation of Momentum and Conservation of Energy. This should be brief and doesn't need to include formulas. I want you to describe the conditions when energy and/or momentum are conserved and the conditions when one or both are not conserved. Also discuss the purpose of the lab.

2. Hypothesis.
3. Method & Materials (include a sketch or photograph). Make sure you address potential sources of error, any precautions taken to reduce errors, or detect errors.
4. DATA/Results - include graphs with statistics and/or fits. A clear table of the data collected would help too. Include relevant observations. Calculations go here. Answer your hypothesis.
5. Conclusion… why does this matter? What specific physics did you use/observe? Be sure to consider and discuss if your answers are reasonable.
6. Attempt quantitative error analysis.

In the past this has been the due date policy…

<u>Your lab report will be due the second class meeting after the date that the lab was started.</u> Your score will be based on sound data collection procedures, correct analysis, and the completeness of your report. The lab is worth 15 points.

Our due date will be…